Tablet stand

3,2 mm (1/8 inch)

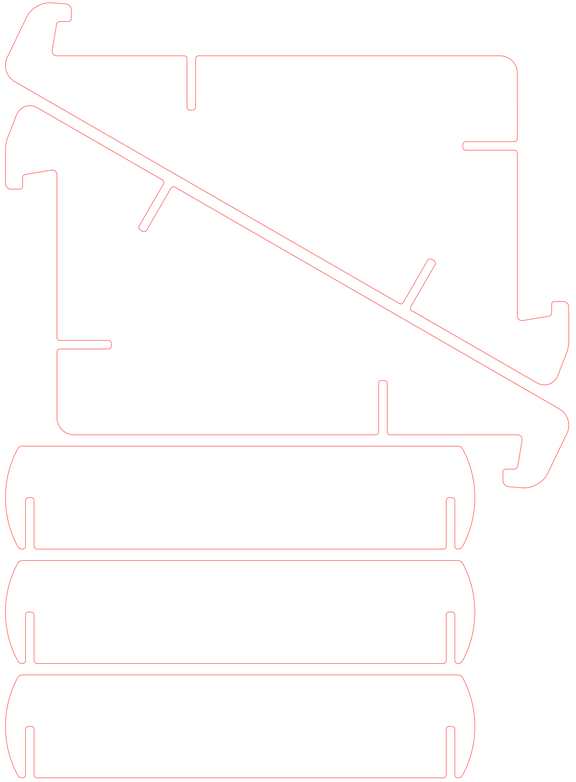

4 mm

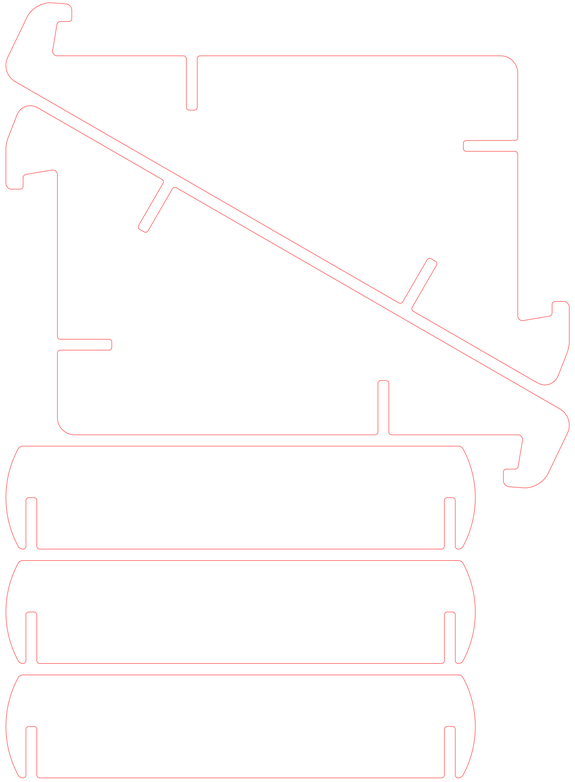

5 mm

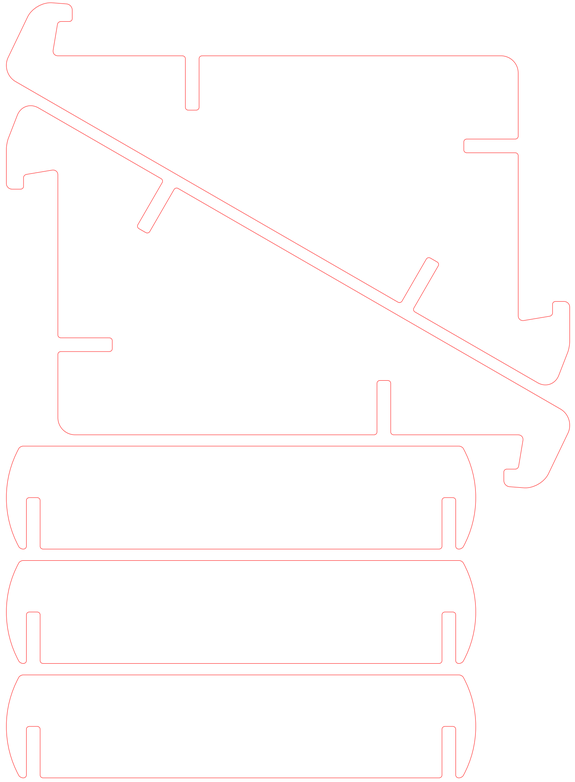
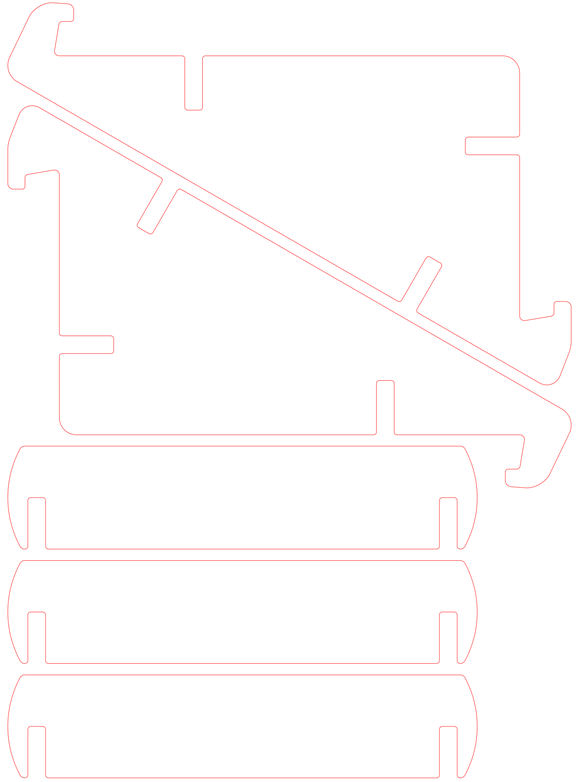
6,35 mm (1/4 inch)